We build a better future

Robex

140LC-9

Equipped with Tier 3 Engine

*Photo may include optional equipment.

HYUNDAI
HEAVY INDUSTRIES EUROPE

Robex 140LC-9

*Photo may include optional equipment.

BUILT FOR MAXIMUM POWER, PERFORMANCE AND RELIABILITY.

Hyundai Heavy Industries enters a new chapter in construction equipment.

Hi-mate
Remote Management System

Hi-mate, Hyundai's newly developed remote management system, using GPS-satellite technology, provides our customers with the highest level of service and product support. Hi-mate enables machine owners to follow-up machine performance, to verify machine location and to access diagnostic information on a distance through any internet connection.

Cabin Design

A complete re-designed cabin offers low noise operation and increased visibility, providing a pleasant working environment for the operator.

Ergonomic Joysticks

New joystick grips, equipped with 4 switches, are offering precise control.

Spacious Cabin with Excellent Visibility

The spacious cabin is ergonomically designed with low noise levels and high visibility. A full-view front window, combined with large rear and side windows provide excellent visibility in all directions.

Enhanced Structure

For optimum safety, the cabin tube-structure has been reinforced.

Tube Section

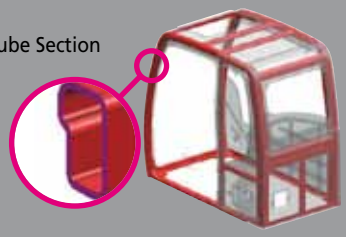

1 Handsfree mobile phone with USB charging device
2 Cup holders and ashtray
3 Radio / MP3 Player with remote control and AUX-input
4 Heated seat (Optional)
5 Storage compartment
6 Additional storage space

Centralized Control Panel

Sunroof with Sliding Cover

Adjustable Operator's Seat

Rear Window Emergency Exit

*Photo may include optional equipment.

Window Locking Device

Performance & Safety Features

Overcome the limits with Robex 9 Series.

*Photo may include optional equipment.

Rearview Camera (Optional)

Track Rail Guard & Adjusters

Durable track rail guards keep tracks in place. Track adjustment is made easy with standard grease cylinder track adjusters and shock absorbing springs.

Mitsubishi D04FD-TAA Engine

The 4 cylinders turbocharged and charged air cooled, engine is built for power, reliability and economy. This engine meets EPA tier 3 and EU stage 3A emission regulation.

Reliability You Can Depend On

When you have a tough job to do you need the power, precision and flexibility of a Mitsubishi D04FD-TAA engines.
It features major enhancements to make every piece of equipment work harder, smarter, quieter and longer.
The high Pressure Common Rail Fuel System provides enhanced engine performance with higher torque and better throttle response at every rpm without compromising fuel economy.
This engines combines full authority electronic controls with reliable performance you expect from one of the most successful and durable engine designs.

Strong and Stable Lower Frame

The reinforced box-section frame is welded using low-stress, high-strength steel. The X-leg type center frame is integrally welded for maximum strength and durability.

1 Reinforced Bucket and Bucket Linkage
Sealed bucket linkage produces less wear of pins and bushes.

2 Engine Speed Control - Dial-Type

3 Power Boost Function

Safety Lever

Master Switch

Anti-Restart System

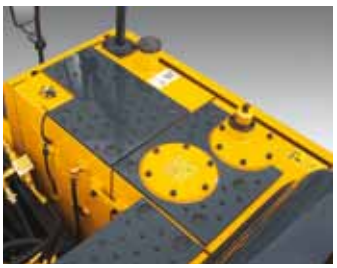

Anti-Slip Plates on Upper Structure

Unique Hydraulic System

Powerful and precise control with a straightforward design

Advanced CAPO System

The advanced CAPO (Computer Aided Power Optimization) system tunes engine and pump power to optimum levels. Multiple mode selections are implemented for specific applications, maintaining high performance while reducing fuel consumption. Additional features include auto deceleration and power boost.
The LCD-display monitors engine speed, coolant and hydraulic oil temperature and through the self-diagnostic capability, it displays current error codes.

Large Display with Toggle Switch (7inch Wide LCD)

The LCD-display can be adjusted to your personal preferences, making it easy to check all critical systems via easy-to-read indicators.

Multi Function Color LCD-Display

- Warning Lights
- 1 Engine Coolant Temperature Gauge
- 2 Fuel Level Gauge
- 3 Hyd. Oil Temperature Gauge
- 4 RPM/Tripmeter Display
- 5 Accel Dial Gauge
- Power mode (P/S/E)
- Work mode (Digging/Breaker/Crusher)
- Attachment mode
- Additional information
- Travel mode
- Auto deceleration mode

1. Back-up switches for Cluster Operation
2. Adjust Flow Settings Attachment Modes: Breaker/Crusher
3. User Mode: Saving Operator Preferences
4. Self-Diagnostics System
5. Maintenance List & Security Password
6. Rearview Camera (Optional)

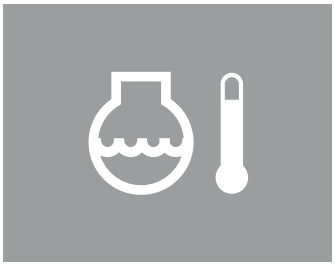

Engine Overheat Prevention

Automatic Warm-Up System

Optimum Hydraulic Performance

Increased pump output capacity through a fine-tuned flow according to the pressure in the hydraulic system.

Auto Deceleration System

When joysticks or travel pedals are in the neutral position during more than 4 seconds, the engine speed will be reduced to 1000 rpm. After 60 seconds, engine speed is automatically reduced to low idle. In this way fuel consumption and cab noise levels are reduced.

Boom & Arm Holding System

Holding valves in the main control valve prevent unexpected boom & arm lowering.

Boom & Arm Flow Regeneration System

The flow regeneration valve saves fuel and increases productivity without cylinder cavitation.

Hydraulic Dampers in Travel Pedal

Smoother and improved travel controllability has been achieved via shock reducing components.

Pump Flow Regulation

Without activating hydraulic functions, the pump flow is minimized to reduce power loss. During operation, optimum pump flow is delivered to the actuator to increase speed. Movements of the joysticks automatically adjust pump flow, with actuator speed controlled proportionally.

Power Boost System

In power mode, the digging forces increase automatically about 10% when necessary. In standard and economy mode the Power Boost system can be activated manually.

One-Touch Deceleration System

When the one-touch deceleration switch is engaged, the MCU limits the engine to idling speed. When the one-touch deceleration switch is disengaged, the engine speed recovers to preset rpm.

Self-Diagnostics System

The MCU diagnoses problems in the CAPO system caused by electric and hydraulic malfunctions and displays the corresponding error code on the LCD-display. The information on this display, including engine rpm, main pump pressure, battery voltage, hydraulic temperature and the status of electric switches, allows the operator to know the operating conditions of the machine. This facilitates troubleshooting problems that may occur.

Attachment Flow Control System

In attachment mode, maximum hydraulic pump flow can be preset. During operation, the hydraulic pump flow can be adjusted in steps with the toggle-switch.

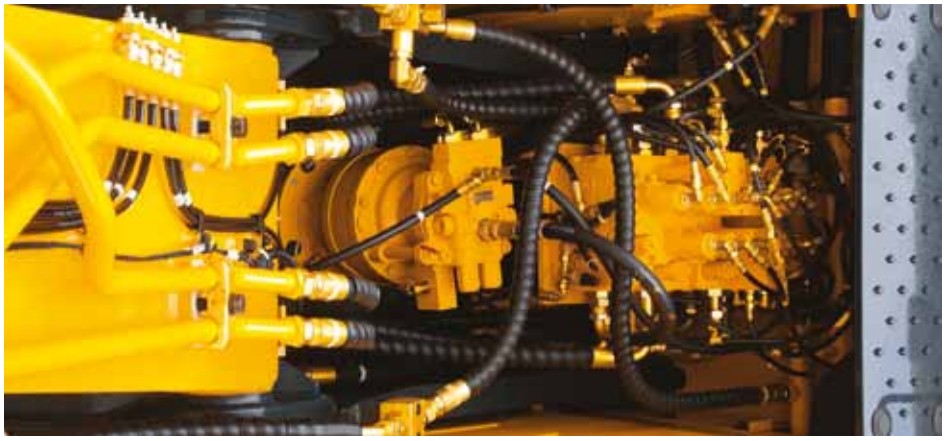

Reliability & Maintenance

Centralized Grease Fittings

Grease fittings are centralized and well accessible for easy service.

Easy Maintenance Components

Cooling and pre-heating systems are designed for a quick start-up and an optimal operation, guaranteeing longer life of engine and hydraulic components. Servicing engine and hydraulics has been considerably simplified due to improved accessibility.

Open Arrangement of Cooling and Electrical compartment

Unrestricted access to vital components allows easy maintenance and repairs.

Extended Exchange Interval of Filters

1 Drain Filter (1,000 hr)

2 Fuel Pre-Filter (500 hr)

Easy to Access Electric Box

Easy to Change Air Filter

Large Toolbox

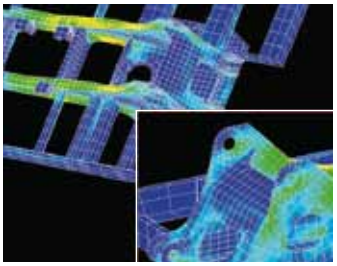

Structure Durability proven via FEM (Finite Element Method) Analysis and Long-Term Durability Tests.

*Photo may include optional equipment.

Extended Life of Hydraulic Oil Filter
Fiber glass filters with extended exchange intervals (250 hr —> 1,000 hr)

Extended Life of Hydraulic Oil
Better protection against oxidation and heat (2,000hr —> 5,000 hr)

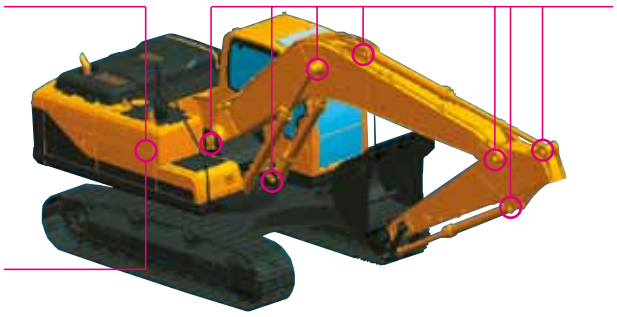

Extended Life of Lubricant Bush & Ultra High Molecular Weight Polymer Shim
(Wear Resistant & Noise Reducing)

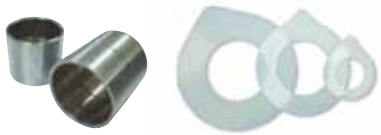

Specifications

ENGINE

MODEL			MITSUBISHI D04FD-TAA
Type			Water cooled, 4 cycle Diesel, 4-Cylinders in line, direct injection, turbocharged, charged air cooled and low emission
Rated flywheel horse power	SAE	J1995 (gross)	119 HP (89 kW) / 2,000 rpm
		J1349 (net)	113 HP (85 kW) / 2,000 rpm
	DIN	6271/1 (gross)	121 PS (89 kW) / 2,000 rpm
		6271/1 (net)	115 PS (85 kW) / 2,000 rpm
Max. torque			45.4 kgf.m (328 lbf.ft) / 1,700 rpm
Bore x stroke			102 x 130 mm (4.01" x 5.12")
Piston displacement			4,249 cc (259 in³)
Batteries			2 X 12V X 100AH
Starting motor			24 V - 5.0 kW
Alternator			24 V - 50 Amp

HYDRAULIC SYSTEM

MAIN PUMP	
Type	Two variable displacement piston pumps
Max. flow	2 X 123.5 L /min (32.6 US gpm / 27.2 UK gpm)
Sub-pump for pilot circuit	Gear pump
Cross-sensing and fuel saving pump system	

HYDRAULIC MOTORS	
Travel	Two speed axial piston motor with brake valve and parking brake
Swing	Axial piston motor with automatic brake

RELIEF VALVE SETTING	
Implement circuits	350 kgf/cm² (4,978 psi)
Travel	350 kgf/cm² (4,978 psi)
Power boost (boom, arm, bucket)	380 kgf/cm² (5,404 psi)
Swing circuit	265 kgf/cm² (3,769 psi)
Pilot circuit	40 kgf/cm² (568 psi)
Service valve	Installed

HYDRAULIC CYLINDERS	
No. of cylinder-bore x stroke	Boom : 2 - 105 x 1,075 mm (4.1" x 42.3")
	Arm : 1 - 115 x 1,138 mm (4.5" x 44.8")
	Bucket : 1 - 100 x 837 mm (3.9" x 33.0")
	Blade : 2 - 100 x 260 mm (3.9" x 10.2")
	1st boom (adjustable-boom) : 2 - 105 x 975 mm (4.1" x 38.4")
	Adjustable-boom : 1 - 145 x 613 mm (5.7" x 24.1")

DRIVES & BRAKES

Drive method	Fully hydrostatic type
Drive motor	Axial piston motor, in-shoe design
Reduction system	Planetary reduction gear
Max. drawbar pull	13,300 kgf (29,320 lbf)
Max. travel speed (high) / (low)	5.5 km/hr (3.4 mph) / 3.2 km/hr (2.0 mph)
Gradeability	35° (70 %)
Parking brake	Multi wet disc

CONTROL

Pilot pressure operated joysticks and pedals with detachable lever provide almost effortless and fatigueless operation.

Pilot control	Two joysticks with one safety lever (LH): Swing and arm (RH): Boom and bucket (ISO)
Traveling and steering	Two levers with pedals
Engine throttle	Electric, Dial type
Lights	Two lights mounted on the boom, one light mounted in the battery box

SWING SYSTEM

Swing motor	Axial piston motor
Swing reduction	Planetary gear reduction
Swing bearing lubrication	Grease-bathed
Swing brake	Multi wet disc
Swing speed	12 rpm

COOLANT & LUBRICANT CAPACITY

Refilling	liter	US gal	UK gal
Fuel tank	270.0	71.3	59.4
Engine coolant	15.5	4.1	3.4
Engine oil	17.5	4.6	3.8
Swing device - gear oil	2.5	0.66	0.55
Final drive (each) - gear oil	3.0	0.79	0.66
Hydraulic system (including tank)	210.0	55.5	46.2
Hydraulic tank	124.0	32.8	27.3

UNDERCARRIAGE

The X-leg type center frame is integrally welded with reinforced box-section track frames. The undercarriage includes lubricated rollers, idlers, track adjusters with shock absorbing springs and sprockets, and a track chain with double or triple grouser shoes.

Center frame	X - leg type	
Track frame	Pentagonal box type	
No. of shoes on each side	46	47
No. of carrier rollers on each side	1	2
No. of track rollers on each side	7	7
No. of rail guards on each side	2	2

OPERATING WEIGHT (APPROXIMATE)

Operating weight, including 4,600 mm (15' 1") boom, 2,500 mm (8' 2") arm, SAE heaped 0.58 m³ (0.76 yd³) bucket, lubricant, coolant, full fuel tank, full hydraulic tank, and all standard equipments.

MAJOR COMPONENT WEIGHT	
Upperstructure	3,820 kg (8,422 lb)
Counterweight	2,000 kg (4,409 lb)
4.6 m (15' 1") mono boom (with arm cylinder)	1,030 kg (2,270 lb)

OPERATING WEIGHT				
Shoes			Operating weight	Ground pressure
Type	Width mm (in)		kg (lb)	kgf/cm² (psi)
Triple grouser	500 (20")	R140LC-9	13,790 (30,400)	0.43 (6.11)
		R140LCD-9	14,590 (32,160)	0.45 (6.40)
	600 (24")	R140LC-9	13,980 (30,820)	0.36 (5.12)
		R140LCD-9	14,800 (32,630)	0.38 (5.40)
	700 (28")	R140LC-9	14,210 (31,330)	0.32 (4.55)
	800 (32")	R140LCM-9	16,880 (37,210)	0.32 (4.55)
Double grouser	710 (28")	R140LCM-9	16,880 (37,210)	0.36 (5.12)

BUCKETS

All buckets are welded with high-strength steel

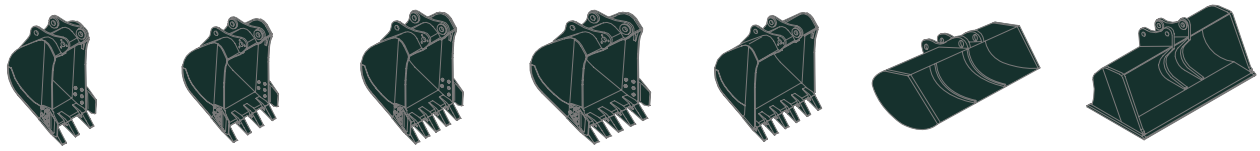

0.23 (0.30) | 0.40 (0.52) 0.46 (0.60) | 0.52 (0.68) 0.58 (0.76) | 0.65 (0.85) | 0.71 (0.93) | ◉ 0.45 (0.59) | ★ 0.55 (0.72)

SAE heaped m³ (yd³)

Capacity m³ (yd³)		Width mm (in)		Weight kg (lb)	Recommendation mm (ft.in)								
					4,600 (15′ 1″) Boom				4,100 (13′ 5″) Boom		4,900 (16′ 1″) Adjustable Boom		
SAE heaped	CECE heaped	Without side cutters	With side cutters		1,900 (6′ 3″) Arm	2,100 (6′ 11″) Arm	2,500 (8′ 2″) Arm	3,000 (9′ 10″) Arm	1,900 (6′ 3″) Arm	2,100 (6′ 11″) Arm	1,900 (6′ 3″) Arm	2,100 (6′ 11″) Arm	2,500 (8′ 2″) Arm
0.23 (0.30)	0.20 (0.26)	520 (20.5)	620 (24.4)	335 (740)	●	●	●	■	●	●	●	●	●
0.40 (0.52)	0.35 (0.46)	760 (29.9)	860 (33.9)	410 (900)	●	●	●	■	●	●	●	●	●
0.46 (0.60)	0.40 (0.52)	850 (33.5)	950 (37.4)	435 (960)	●	●	●	▲	●	●	●	●	■
0.52 (0.68)	0.45 (0.59)	935 (36.8)	1,035 (40.8)	460 (1,010)	●	●	●	–	●	●	●	■	■
0.58 (0.76)	0.50 (0.65)	1,030 (40.6)	1,130 (44.5)	480 (1,060)	●	●	■	–	●	●	■	▲	▲
0.65 (0.85)	0.55 (0.72)	1,110 (43.7)	1,210 (47.6)	500 (1,100)	■	■	▲	–	●	■	▲	▲	–
0.71 (0.93)	0.60 (0.78)	1,205 (47.4)	-	540 (1,190)	▲	▲	–	–	■	▲	▲	–	–
◉ 0.45 (0.59)	0.40 (0.52)	1,520 (59.8)	-	410 (900)	●	●	■	–	●	●	■	■	▲
★ 0.55 (0.72)	0.45 (0.59)	1,800 (70.9)	-	585 (1,290)	■	■	▲	–	●	●	■	▲	▲

◉ Slope finishing bucket
★ Ditch cleaning bucket

● Applicable for materials with density of 2,000 kg / m³ (3,370 lb / yd³) or less
■ Applicable for materials with density of 1,600 kg / m³ (2,700 lb / yd³) or less
▲ Applicable for materials with density of 1,100 kg / m³ (1,850 lb / yd³) or less

ATTACHMENT

Booms and arms are welded, a low-stress, full-box section design. 4.6 m (15′ 1″); 4.1 m (13′ 5″) boom, 4.9 m (16′ 1″) adjustable boom and 1.9 m (6′ 3″); 2.1 m (6′ 11″); 2.5 m (8′ 2″) & 3.0 m (9′ 10″) arms are available.

DIGGING FORCE

Boom	Length	mm (ft.in)	4,600 (15′ 1″)				Remarks
	Weight	kg (lb)	1,030 (2,270)				
Arm	Length	mm (ft.in)	1,900 (6′ 3″)	2,100 (6′ 11″)	2,500 (8′ 2″)	3,000 (9′ 10″)	
	Weight	kg (lb)	560 (1,230)	580 (1,280)	610 (1,340)	670 (1,480)	
Bucket digging force	SAE	kN	87.3 [94.8]	87.3 [94.8]	87.3 [94.8]	87.3 [94.8]	[ ]: Power Boost
		kgf	8,900 [9,660]	8,900 [9,660]	8,900 [9,660]	8,900 [9,660]	
		lbf	19,620 [21,300]	19,620 [21,300]	19,620 [21,300]	19,620 [21,300]	
	ISO	kN	102 [110.8]	102 [110.8]	102 [110.8]	102 [110.8]	
		kgf	10,400 [11,290]	10,400 [11,290]	10,400 [11,290]	10,400 [11,290]	
		lbf	22,930 [24,890]	22,930 [24,890]	22,930 [24,890]	22,930 [24,890]	
Arm crowd force	SAE	kN	76.5 [83.1]	73.6 [79.9]	62.8 [68.2]	55.9 [60.7]	
		kgf	7,800 [8,470]	7,500 [8,140]	6,400 [6,950]	5,700 [6,190]	
		lbf	17,200 [18,670]	16,530 [17,950]	14,110 [15,320]	12,570 [13,640]	
	ISO	kN	80.4 [87.3]	77.5 [84.1]	65.7 [71.4]	57.9 [62.8]	
		kgf	8,200 [8,900]	7,900 [8,580]	6,700 [7,270]	5,900 [6,410]	
		lbf	18,080 [19,630]	17,420 [18,910]	14,770 [16,040]	13,010 [14,120]	

Note: Boom weight includes arm cylinder, piping, and pin
Arm weight includes bucket cylinder, linkage, and pin

Dimensions & Working Ranges

DIMENSIONS R140LC-9

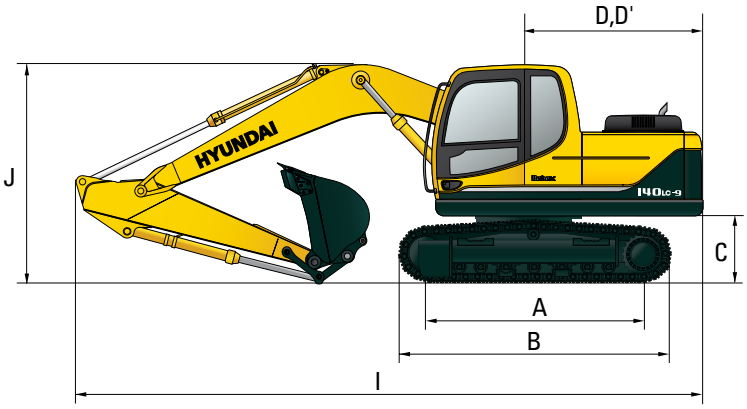

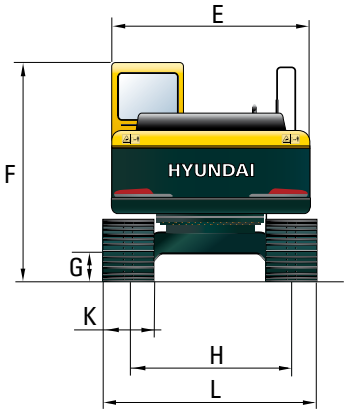

mm (ft · in)

A	Tumbler distance	3,000 (9′ 10″)
B	Overall length of crawler	3,750 (12′ 4″)
C	Ground clearance of counterweight	940 (3′ 1″)
D	Tail swing radius	2,330 (7′ 7″)
D′	Rear-end length	2,330 (7′ 7″)
E	Overall width of upperstructure	2,500 (8′ 2″)
F	Overall height of cab	2,860 (9′ 4″)
G	Min. ground clearance	440 (1′ 5″)
H	Track gauge	2,000 (6′ 7″)

mm (ft · in)

	Boom length	4,600 (15′ 1″)				4,100 (13′ 5″)	
	Arm length	1,900 (6′ 3″)	2,100 (6′ 11″)	2,500 (8′ 2″)	3,000 (9′ 10″)	1,900 (6′ 3″)	2,100 (6′ 11″)
I	Overall length	7,820 (25′ 7″)	7,850 (25′ 8″)	7,820 (25′ 7″)	7,790 (25′ 6″)	7,320 (24′ 0″)	7,350 (24′ 1″)
J	Overall height of boom	2,650 (8′ 7″)	2,760 (9′ 0″)	2,780 (9′ 1″)	3,110 (10′ 2″)	2,600 (8′ 5″)	2,790 (9′ 2″)

K	Track shoe width	500 (20″)	600 (24″)	700 (28″)
L	Overall width	2,500 (8′ 2″)	2,600 (8′ 6″)	2,700 (8′ 10″)

WORKING RANGES R140LC-9

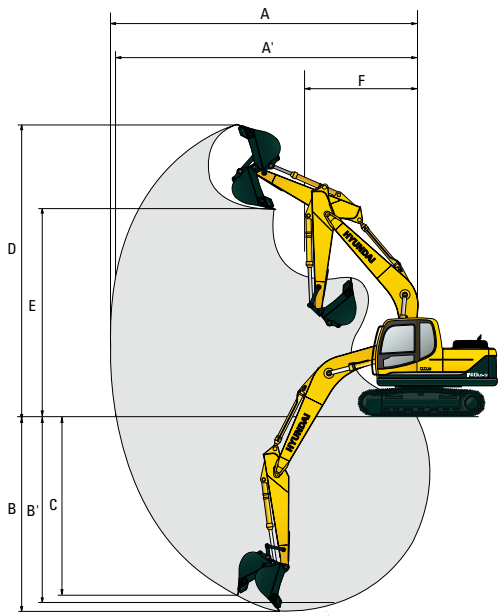

mm (ft · in)

	Boom length	4,600 (15′ 1″)				4,100 (13′ 5″)	
	Arm length	1,900 (6′ 3″)	2,100 (6′ 11″)	2,500 (8′ 2″)	3,000 (9′ 10″)	1,900 (6′ 3″)	2,100 (6′ 11″)
A	Max. digging reach	7,750 (25′ 5″)	7,920 (25′ 11″)	8,330 (27′ 4″)	8,790 (28′ 10″)	7,260 (23′ 10″)	7,420 (24′ 4″)
A′	Max. digging reach on ground	7,600 (24′ 11″)	7,770 (25′ 6″)	8,180 (26′ 10″)	8,650 (28′ 4″)	7,090 (23′ 3″)	7,260 (23′ 10″)
B	Max. digging depth	4,950 (16′ 2″)	5,150 (16′ 10″)	5,550 (18′ 3″)	6,050 (19′ 10″)	4,540 (14′ 11″)	4,740 (15′ 7″)
B′	Max. digging depth (8′ level)	4,680 (15′ 4″)	4,900 (16′ 1″)	5,340 (17′ 6″)	5,870 (19′ 3″)	4,280 (14′ 1″)	4,490 (14′ 9″)
C	Max. vertical wall digging depth	4,650 (15′ 3″)	4,900 (16′ 1″)	5,330 (17′ 6″)	5,850 (19′ 2″)	4,240 (13′ 11″)	4,350 (14′ 3″)
D	Max. digging height	8,100 (26′ 7″)	8,180 (26′ 10″)	8,500 (27′ 11″)	8,780 (28′ 10″)	7,700 (25′ 3″)	7,770 (25′ 6″)
E	Max. dumping height	5,670 (18′ 7″)	5,750 (18′ 10″)	6,060 (19′ 11″)	6,330 (20′ 9″)	5,260 (17′ 3″)	5,340 (17′ 6″)
F	Min. swing radius	2,630 (8′ 8″)	2,670 (8′ 9″)	2,650 (8′ 8″)	2,680 (8′ 10″)	2,350 (7′ 9″)	2,460 (8′ 1″)

Dimensions & Working Ranges

DIMENSIONS R140LCD-9

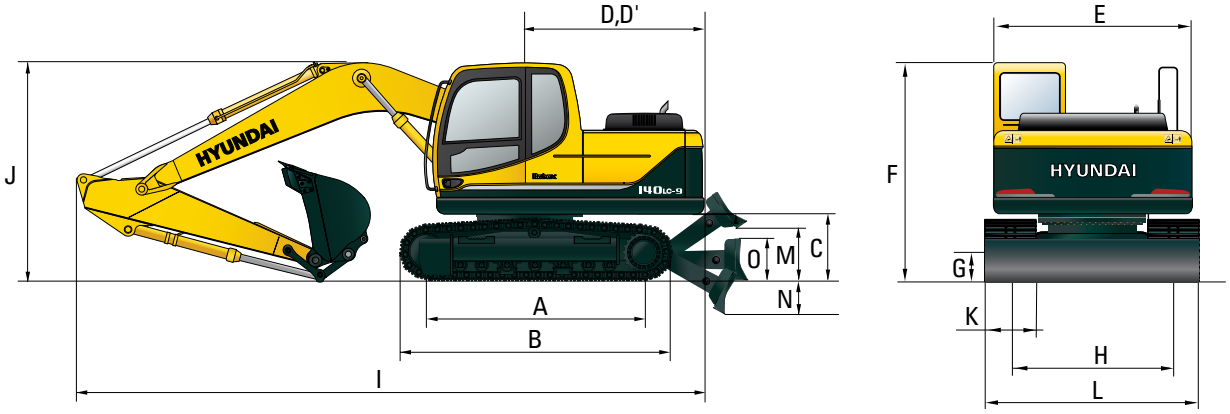

mm (ft · in)

A	Tumbler distance	3,000 (9′ 10″)
B	Overall length of crawler	3,750 (12′ 4″)
C	Ground clearance of counterweight	940 (3′ 1″)
D	Tail swing radius	2,330 (7′ 7″)
D′	Rear-end length	2,330 (7′ 7″)
E	Overall width of upperstructure	2,500 (8′ 2″)
F	Overall height of cab	2,860 (9′ 4″)
G	Min. ground clearance	440 (1′ 5″)
H	Track gauge	2,000 (6′ 7″)
M	Ground clearance of blade up	560 (1′ 8″)
N	Depth of blade down	500 (1′ 6″)
O	Height of blade	550 (1′ 8″)
	Width of blade	2,500 (8′ 2″) 2,600 (8′ 6″)

mm (ft · in)

	Boom length	4,600 (15′ 1″)				4,100 (13′ 5″)	
	Arm length	1,900 (6′ 3″)	2,100 (6′ 11″)	2,500 (8′ 2″)	3,000 (9′ 10″)	1,900 (6′ 3″)	2,100 (6′ 11″)
I	Overall length	8,130 (26′ 7″)	8,160 (26′ 7″)	8,130 (26′ 7″)	8,100 (26′ 6″)	7,630 (25′ 0″)	7,660 (25′ 1″)
J	Overall height of boom	2,650 (8′ 7″)	2,760 (9′ 0″)	2,780 (9′ 1″)	3,110 (10′ 2″)	2,600 (8′ 5″)	2,790 (9′ 2″)

K	Track shoe width	500 (20″)	600 (24″)	700 (28″)
L	Overall width	2,500 (8′ 2″)	2,600 (8′ 6″)	2,700 (8′ 10″)

WORKING RANGES R140LCD-9

mm (ft · in)

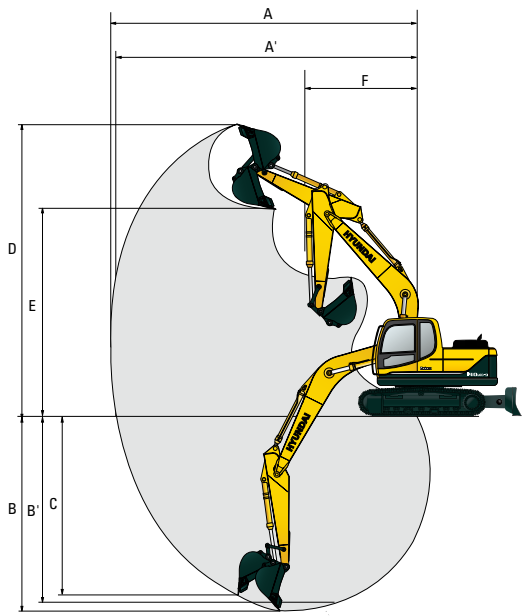

	Boom length	4,600 (15′ 1″)				4,100 (13′ 5″)	
	Arm length	1,900 (6′ 3″)	2,100 (6′ 11″)	2,500 (8′ 2″)	3,000 (9′ 10″)	1,900 (6′ 3″)	2,100 (6′ 11″)
A	Max. digging reach	7,750 (25′ 5″)	7,920 (25′ 11″)	8,330 (27′ 4″)	8,790 (28′ 10″)	7,260 (23′ 10″)	7,420 (24′ 4″)
A′	Max. digging reach on ground	7,600 (24′ 11″)	7,770 (25′ 6″)	8,180 (26′ 10″)	8,650 (28′ 4″)	7,090 (23′ 3″)	7,260 (23′ 10″)
B	Max. digging depth	4,950 (16′ 2″)	5,150 (16′ 10″)	5,550 (18′ 3″)	6,050 (19′ 10″)	4,540 (14′ 11″)	4,740 (15′ 7″)
B′	Max. digging depth (8′ level)	4,680 (15′ 4″)	4,900 (16′ 1″)	5,340 (17′ 6″)	5,870 (19′ 3″)	4,280 (14′ 1″)	4,490 (14′ 9″)
C	Max. vertical wall digging depth	4,650 (15′ 3″)	4,900 (16′ 1″)	5,330 (17′ 6″)	5,850 (19′ 2″)	4,240 (13′ 11″)	4,350 (14′ 3″)
D	Max. digging height	8,100 (26′ 7″)	8,180 (26′ 10″)	8,500 (27′ 11″)	8,780 (28′ 10″)	7,700 (25′ 3″)	7,770 (25′ 6″)
E	Max. dumping height	5,670 (18′ 7″)	5,750 (18′ 10″)	6,060 (19′ 11″)	6,330 (20′ 9″)	5,260 (17′ 3″)	5,340 (17′ 6″)
F	Min. swing radius	2,630 (8′ 8″)	2,670 (8′ 9″)	2,650 (8′ 8″)	2,680 (8′ 10″)	2,350 (7′ 9″)	2,460 (8′ 1″)

Dimensions & Working Ranges

DIMENSIONS R140LCM-9

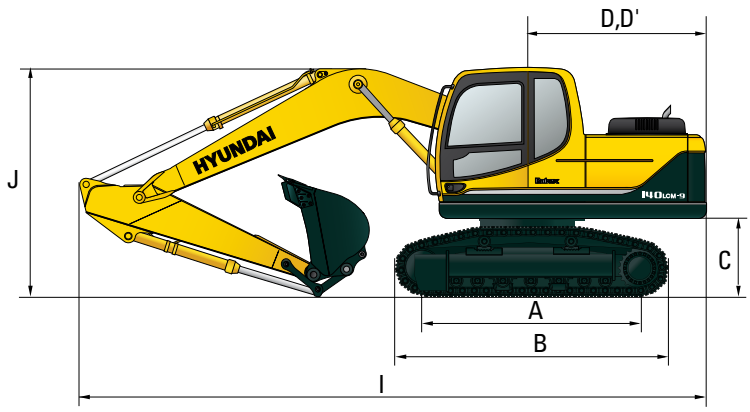

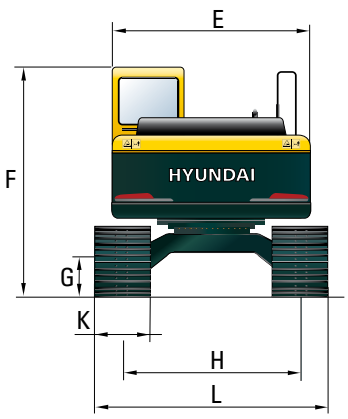

mm (ft · in)

A	Tumbler distance	3,030 (9′ 11″)
B	Overall length of crawler	3,860 (12′ 4″)
C	Ground clearance of counterweight	1,200 (3′ 9″)
D	Tail swing radius	2,330 (7′ 7″)
D′	Rear-end length	2,330 (7′ 7″)
E	Overall width of upperstructure	2,500 (8′ 2″)
F	Overall height of cab	3,120 (10′ 2″)
G	Min. ground clearance	600 (2′ 0″)
H	Track gauge	2,040 (6′ 8″)

mm (ft · in)

	Boom length	4,600 (15′ 1″)		
	Arm length	1,900 (6′ 3″)	2,100 (6′ 11″)	2,500 (8′ 2″)	3,000 (9′ 10″)
I	Overall length	7,770 (25′ 5″)	7,830 (25′ 7″)	7,790 (25′ 6″)	7,860 (25′ 8″)
J	Overall height of boom	2,750 (9′ 0″)	2,860 (9′ 4″)	2,830 (9′ 3″)	3,120 (10′ 2″)

K	Track shoe width	Type	Double grouser	Triple grouser
		Width	710 (28″)	800 (32″)
L	Overall width		2,750 (9′ 0″)	2,840 (9′ 4″)

WORKING RANGES R140LCM-9

mm (ft · in)

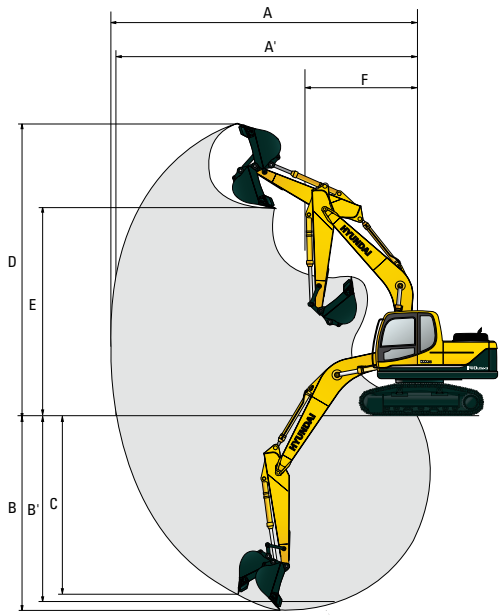

	Boom length	4,600 (15′ 1″)			
	Arm length	1,900 (6′ 3″)	2,100 (6′ 11″)	2,500 (8′ 2″)	3,000 (9′ 10″)
A	Max. digging reach	7,750 (25′ 5″)	7,920 (25′ 11″)	8,330 (27′ 4″)	8,790 (28′ 10″)
A′	Max. digging reach on ground	7,540 (24′ 9″)	7,710 (25′ 4″)	8,110 (26′ 7″)	8,580 (28′ 2″)
B	Max. digging depth	4,690 (15′ 5″)	4,890 (16′ 1″)	5,290 (17′ 4″)	5,790 (19′ 0″)
B′	Max. digging depth (8′ level)	4,420 (14′ 6″)	4,640 (15′ 3″)	5,080 (16′ 8″)	5,610 (18′ 5″)
C	Max. vertical wall digging depth	4,390 (14′ 5″)	4,640 (15′ 3″)	5,070 (16′ 8″)	5,590 (18′ 4″)
D	Max. digging height	8,360 (27′ 5″)	8,440 (27′ 8″)	8,760 (28′ 9″)	9,040 (29′ 7″)
E	Max. dumping height	5,930 (19′ 5″)	6,010 (19′ 8″)	6,320 (20′ 9″)	6,590 (21′ 7″)
F	Min. swing radius	2,630 (8′ 8″)	2,670 (8′ 9″)	2,650 (8′ 8″)	2,680 (8′ 10″)

Dimensions & Working Ranges

DIMENSIONS R140LC-9 ADJUSTABLE BOOM

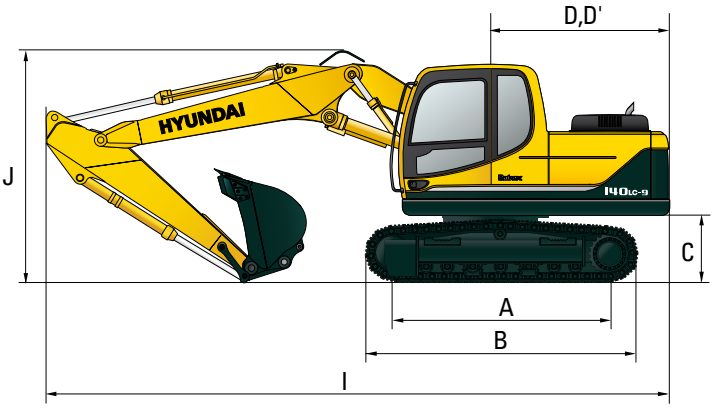

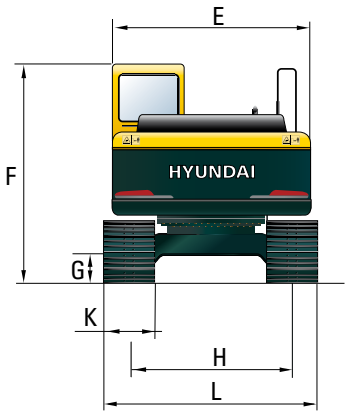

mm (ft · in)

A	Tumbler distance	3,000 (9′ 10″)
B	Overall length of crawler	3,750 (12′ 4″)
C	Ground clearance of counterweight	940 (3′ 1″)
D	Tail swing radius	2,330 (7′ 7″)
D′	Rear-end length	2,330 (7′ 7″)
E	Overall width of upperstructure	2,500 (8′ 2″)
F	Overall height of cab	2,870 (9′ 4″)
G	Min. ground clearance	440 (1′ 5″)
H	Track gauge	2,000 (6′ 7″)

mm (ft · in)

	Boom length	4,900 (16′ 1″), Adjustable boom		
	Arm length	1,900 (6′ 3″)	2,100 (6′ 11″)	2500 (8′ 2″)
I	Overall length	8,160 (26′ 8″)	8,170 (26′ 8″)	8,150 (26′ 8″)
J	Overall height of boom	2,830 (9′ 3″)	2,940 (9′ 6″)	2,960 (9′ 7″)
K	Track shoe width	500 (20″)	600 (24″)	700 (28″)
L	Overall width	2,500 (8′ 2″)	2,600 (8′ 6″)	2,700 (8′ 10″)

WORKING RANGES R140LC-9 ADJUSTABLE BOOM

mm (ft · in)

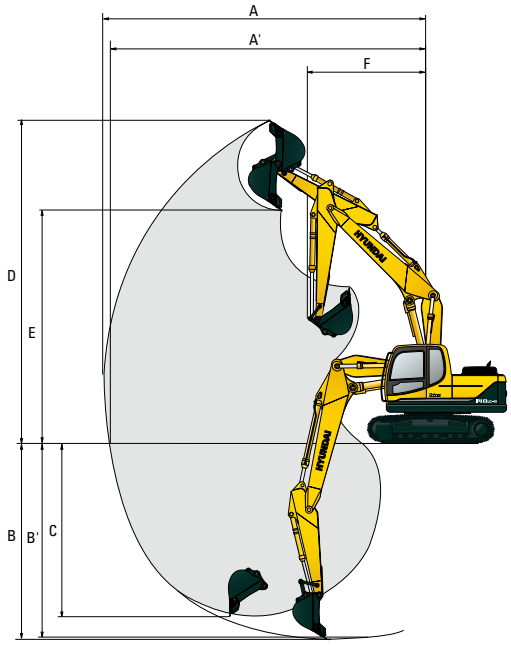

	Boom length	4,900 (16′ 1″), Adjustable boom		
	Arm length	1,900 (6′ 3″)	2,100 (6′ 11″)	2,500 (8′ 2″)
A	Max. digging reach	8,140 (26′ 8″)	8,320 (27′ 4″)	8,720 (28′ 7″)
A′	Max. digging reach on ground	8,000 (26′ 3″)	8,180 (26′ 10″)	8,590 (28′ 2″)
B	Max. digging depth	5,110 (16′ 9″)	5,310 (17′ 5″)	5,710 (18′ 9″)
B′	Max. digging depth (8′ level)	5,000 (16′ 5″)	5,190 (17′ 0″)	5,610 (18′ 5″)
C	Max. vertical wall digging depth	4,490 (14′ 9″)	4,660 (15′ 3″)	5,120 (16′ 10″)
D	Max. digging height	8,810 (28′ 11″)	8,890 (29′ 2″)	9,270 (30′ 5″)
E	Max. dumping height	6,330 (20′ 9″)	6,410 (21′ 0″)	6,780 (22′ 3″)
F	Min. swing radius	2,670 (8′ 9″)	2,830 (9′ 3″)	2,690 (8′ 10″)

Lifting Capacities

R140LC-9

Rating over-front Rating over-side or 360 degrees

Boom : 4.6 m (15′ 1″) / Arm : 1.9 m (6′ 3″) / Bucket : 0.58 m³ (0.76 yd³) SAE heaped / Shoe : 600 mm (24″) triple grouser with 2,000 kg (4,410 lb) counterweight

Load point height m (ft)		Load radius								At max. reach		
		1.5 m (5.0 ft)		3.0 m (10.0 ft)		4.5 m (15.0 ft)		6.0 m (20.0 ft)		Capacity		Reach
												m (ft)
6.0 m	kg					⁎ 3340	⁎ 3340			⁎ 3170	2350	5.95
(20.0 ft)	lb					⁎ 7360	⁎ 7360			⁎ 6990	5180	(19.5)
4.5 m	kg					⁎ 3550	⁎ 3550			2820	1760	6.90
(15.0 ft)	lb					⁎ 7830	⁎ 7830			6220	3880	(22.6)
3.0m	kg			⁎ 6270	⁎ 6270	⁎ 4440	3510	3480	2170	2480	1520	7.37
(10.0 ft)	lb			⁎ 13820	⁎ 13820	⁎ 9790	7740	7670	4780	5470	3350	(24.2)
1.5 m	kg			⁎ 8490	6040	5400	3270	3380	2080	2390	1450	7.45
(5.0 ft)	lb			⁎ 18720	13320	11900	7210	7450	4590	5270	3200	(24.4)
Ground Line	kg			⁎ 8230	5790	5200	3100	3300	2000	2510	1520	7.17
	lb			⁎ 18140	12760	11460	6830	7280	4410	5530	3350	(23.5)
(-1.5 m	kg	⁎ 6670	⁎ 6670	⁎ 9690	5800	5140	3050			2960	1810	6.48
(-5.0 ft)	lb	⁎ 14700	⁎ 14700	⁎ 21360	12790	11330	6720			6530	3990	(21.3)
(-3.0 m	kg	⁎ 10970	⁎ 10970	⁎ 8330	5930	5220	3110			⁎ 3690	2670	5.15
(-10.0 ft)	lb	⁎ 24180	⁎ 24180	⁎ 18360	13070	11510	6860			⁎ 8140	5890	(16.9)

Boom : 4.6 m (15′ 1″) / Arm : 2.5 m (8′ 2″) / Bucket : 0.58 m³ (0.76 yd³) SAE heaped / Shoe : 600 mm (24″) triple grouser with 2,000 kg (4,410 lb) counterweight

Load point height m (ft)		Load radius								At max. reach		
		1.5 m (5.0 ft)		3.0 m (10.0 ft)		4.5 m (15.0 ft)		6.0 m (20.0 ft)		Capacity		Reach
												m (ft)
6.0 m	kg									⁎ 2810	1920	6.69
(20.0 ft)	lb									⁎ 6190	4230	(21.9)
4.5 m	kg							⁎ 2770	2270	2440	1500	7.53
(15.0 ft)	lb							⁎ 6110	5000	5380	3310	(24.7)
3.0m	kg			⁎ 4930	⁎ 4930	⁎ 3830	3570	⁎ 3380	2190	2170	1310	7.95
(10.0 ft)	lb			⁎ 10870	⁎ 10870	⁎ 8440	7870	⁎ 7450	4830	4780	2890	(26.1)
1.5 m	kg			⁎ 8030	6240	⁎ 5010	3300	3380	2070	2100	1250	8.03
(5.0 ft)	lb			⁎ 17700	13760	⁎ 11050	7280	7450	4560	4630	2760	(26.3)
Ground Line	kg			⁎ 8780	5800	5200	3090	3270	1970	2180	1300	7.77
	lb			⁎ 19360	12790	11460	6810	7210	4340	4810	2870	(25.5)
-1.5 m	kg	⁎ 5740	⁎ 5740	⁎ 9910	5700	5080	2990	3220	1920	2500	1500	7.15
(-5.0 ft)	lb	⁎ 12650	⁎ 12650	⁎ 21850	12570	11200	6590	7100	4230	5510	3310	(23.5)
-3.0 m	kg	⁎ 8760	⁎ 8760	⁎ 9040	5770	5100	3000			3340	2030	6.01
(-10.0 ft)	lb	⁎ 19310	⁎ 19310	⁎ 19930	12720	11240	6610			7360	4480	(19.7)
-4.5 m	kg			⁎ 6590	6030							
(-15.0 ft)	lb			⁎ 14530	13290							

Boom : 4.6 m (15′ 1″) / Arm : 3.0 m (9′ 10″) / Bucket : 0.58 m³ (0.76 yd³) SAE heaped / Shoe : 600 mm (24″) triple grouser with 2,000 kg (4,410 lb) counterweight

Load point height m (ft)		Load radius										At max. reach		
		1.5 m (5.0 ft)		3.0 m (10.0 ft)		4.5 m (15.0 ft)		6.0 m (20.0 ft)		7.5 m (25.0 ft)		Capacity		Reach
														m (ft)
6.0 m	kg							⁎ 1880	⁎ 1880			⁎ 2540	1650	7.25
(20.0 ft)	lb							⁎ 4140	⁎ 4140			⁎ 5600	3640	(23.8)
4.5 m	kg							⁎ 2570	2310			2180	1320	8.02
(15.0 ft)	lb							⁎ 5670	5090			4810	2910	(26.3)
3.0m	kg					⁎ 3280	⁎ 3280	⁎ 3020	2210	⁎ 1660	1430	1960	1160	8.41
(10.0 ft)	lb					⁎ 7230	⁎ 7230	⁎ 6660	4870	⁎ 3660	3150	4320	2560	(27.6)
1.5 m	kg			⁎ 6980	6440	⁎ 4540	3350	3400	2080	⁎ 2190	1380	1890	1100	8.49
(5.0 ft)	lb			⁎ 15390	14200	⁎ 10010	7390	7500	4590	⁎ 4830	3040	4170	2430	(27.9)
Ground Line	kg			⁎ 9240	5850	5210	3100	3260	1960	⁎ 2120	1330	1960	1140	8.25
	lb			⁎ 20370	12900	11490	6830	7190	4320	⁎ 4670	2930	4320	2510	(27.1)
-1.5 m	kg	⁎ 5290	⁎ 5290	⁎ 9910	5650	5060	2960	3180	1890			2200	1290	7.67
(-5.0 ft)	lb	⁎ 11660	⁎ 11660	⁎ 21850	12460	11160	6530	7010	4170			4850	2840	(25.2)
-3.0 m	kg	⁎ 7720	⁎ 7720	⁎ 9440	5670	5030	2940	3180	1880			2800	1680	6.64
(-10.0 ft)	lb	⁎ 17020	⁎ 17020	⁎ 20810	12500	11090	6480	7010	4140			6170	3700	(21.8)
-4.5 m	kg	⁎ 11300	⁎ 11300	⁎ 7670	5850	⁎ 4890	3050							
(-15.0 ft)	lb	⁎ 24910	⁎ 24910	⁎ 16910	12900	⁎ 10780	6720							

1. Lifting capacity is based on SAE J1097, ISO 10567.
2. Lifting capacity of the Robex Series does not exceed 75% of the tipping load with the machine on firm, level ground or 87% of full hydraulic capacity.
3. The load point is a hook located on the back of the bucket.
4. (*) indicates the load limited by hydraulic capacity.

Lifting Capacities

R140LCD-9

Rating over-front Rating over-side or 360 degrees

Boom : 4.6 m (15’ 1”) / Arm : 1.9 m (6’ 3”) / Bucket : 0.58 m³ (0.76 yd³) SAE heaped / Shoe : 600 mm (24”) triple grouser with 2,000 kg (4,410 lb) counterweight

Load point height m (ft)		Load radius								At max. reach		
		1.5 m (5.0 ft)		3.0 m (10.0 ft)		4.5 m (15.0 ft)		6.0 m (20.0 ft)		Capacity		Reach
												m (ft)
6.0 m	kg					* 3340	* 3340			* 3170	2490	5.95
(20.0 ft)	lb					* 7360	* 7360			* 6990	5490	(19.5)
4.5 m	kg					* 3550	* 3550			3070	1870	6.90
(15.0 ft)	lb					* 7830	* 7830			6770	4120	(22.6)
3.0m	kg			* 6270	* 6270	* 4440	3700	3780	2300	2710	1620	7.37
(10.0 ft)	lb			* 13820	* 13820	* 9790	8160	8330	5070	5970	3570	(24.2)
1.5 m	kg			* 8490	6380	* 5520	3460	3680	2210	2610	1550	7.45
(5.0 ft)	lb			* 18720	14070	* 12170	7630	8110	4870	5750	3420	(24.4)
Ground Line	kg			* 8230	6130	5650	3290	3590	2130	2750	1630	7.17
	lb			* 18140	13510	12460	7250	7910	4700	6060	3590	(23.5)
(-1.5 m	kg	* 6670	* 6670	* 9690	6140	5590	3240			3230	1930	6.48
(-5.0 ft)	lb	* 14700	* 14700	* 21360	13540	12320	7140			7120	4250	(21.3)
(-3.0 m	kg	* 10970	* 10970	* 8330	6270	* 5520	3300			* 3690	2830	5.15
(-10.0 ft)	lb	* 24180	* 24180	* 18360	13820	* 12170	7280			* 8140	6240	(16.9)

Boom : 4.6 m (15’ 1”) / Arm : 2.5 m (8’ 2”) / Bucket : 0.58 m³ (0.76 yd³) SAE heaped / Shoe : 600 mm (24”) triple grouser with 2,000 kg (4,410 lb) counterweight

Load point height m (ft)		Load radius								At max. reach		
		1.5 m (5.0 ft)		3.0 m (10.0 ft)		4.5 m (15.0 ft)		6.0 m (20.0 ft)		Capacity		Reach
												m (ft)
6.0 m	kg									* 2810	2040	6.69
(20.0 ft)	lb									* 6190	4500	(21.9)
4.5 m	kg							* 2770	2410	2660	1600	7.53
(15.0 ft)	lb							* 6110	5310	5860	3530	(24.7)
3.0m	kg			* 4930	* 4930	* 3830	3770	* 3380	2320	2380	1400	7.95
(10.0 ft)	lb			* 10870	* 10870	* 8440	8310	* 7450	5110	5250	3090	(26.1)
1.5 m	kg			* 8030	6580	* 5010	3490	3680	2210	2300	1340	8.03
(5.0 ft)	lb			* 17700	14510	* 11050	7690	8110	4870	5070	2950	(26.3)
Ground Line	kg			* 8780	6140	5640	3280	3570	2110	2400	1400	7.77
	lb			* 19360	13540	12430	7230	7870	4650	5290	3090	(25.5)
-1.5 m	kg	* 5740	* 5740	* 9910	6040	5530	3180	3510	2060	2730	1610	7.15
(-5.0 ft)	lb	* 12650	* 12650	* 21850	13320	12190	7010	7740	4540	6020	3550	(23.5)
-3.0 m	kg	* 8760	* 8760	* 9040	6110	5550	3200			* 3540	2170	6.01
(-10.0 ft)	lb	* 19310	* 19310	* 19930	13470	12240	7050			* 7800	4780	(19.7)
-4.5 m	kg			* 6590	6370							
(-15.0 ft)	lb			* 14530	14040							

Boom : 4.6 m (15’ 1”) / Arm : 3.0 m (9’ 10”) / Bucket : 0.58 m³ (0.76 yd³) SAE heaped / Shoe : 600 mm (24”) triple grouser with 2,000 kg (4,410 lb) counterweight

Load point height m (ft)		Load radius										At max. reach		
		1.5 m (5.0 ft)		3.0 m (10.0 ft)		4.5 m (15.0 ft)		6.0 m (20.0 ft)		7.5 m (25.0 ft)		Capacity		Reach
														m (ft)
6.0 m	kg							* 1880	* 1880			* 2540	1760	7.25
(20.0 ft)	lb							* 4140	* 4140			* 5600	3880	(23.8)
4.5 m	kg							* 2570	2440			2380	1410	8.02
(15.0 ft)	lb							* 5670	5380			5250	3110	(26.3)
3.0m	kg					* 3280	* 3280	* 3020	2350	* 1660	1540	2150	1250	8.41
(10.0 ft)	lb					* 7230	* 7230	* 6660	5180	* 3660	3400	4740	2760	(27.6)
1.5 m	kg			* 6980	6780	* 4540	3540	* 3610	2220	* 2190	1480	2080	1190	8.49
(5.0 ft)	lb			* 15390	14950	* 10010	7800	* 7960	4890	* 4830	3260	4590	2620	(27.9)
Ground Line	kg			* 9240	6190	* 5630	3290	3560	2090	* 2120	1480	2150	1230	8.25
	lb			* 20370	13650	* 12410	7250	7850	4610	* 4670	3150	4740	2710	(27.1)
-1.5 m	kg	* 5290	* 5290	* 9910	5990	5500	3150	3480	2020			2410	1390	7.67
(-5.0 ft)	lb	* 11660	* 11660	* 21850	13210	12130	6940	7670	4450			5310	3060	(25.2)
-3.0 m	kg	* 7720	* 7720	* 9440	6010	5480	3130	3480	2020			3060	1800	6.64
(-10.0 ft)	lb	* 17020	* 17020	* 20810	13250	12080	6900	7670	4450			6750	3970	(21.8)
-4.5 m	kg	* 11300	* 11300	* 7670	6190	* 4890	3240							
(-15.0 ft)	lb	* 24910	* 24910	* 16910	13650	* 10780	7140							

1. Lifting capacity is based on SAE J1097, ISO 10567.
2. Lifting capacity of the Robex Series does not exceed 75% of the tipping load with the machine on firm, level ground or 87% of full hydraulic capacity.
3. The load point is a hook located on the back of the bucket.
4. (*) indicates the load limited by hydraulic capacity.

Lifting Capacities

R140LCM-9

Rating over-front Rating over-side or 360 degrees

Boom : 4.6 m (15' 1") / Arm : 1.9 m (6' 3") / Bucket : 0.58 m³ (0.76 yd³) SAE heaped / Shoe : 800 mm (32") triple grouser with 2,000 kg (4,410 lb) counterweight

Load point height m (ft)		Load radius								At max. reach		
		1.5 m (5.0 ft)		3.0 m (10.0 ft)		4.5 m (15.0 ft)		6.0 m (20.0 ft)		Capacity		Reach
												m (ft)
6.0 m	kg					* 3310	* 3310			* 3180	2610	6.16
(20.0 ft)	lb					* 7300	* 7300			* 7010	5750	(20.2)
4.5 m	kg					* 3670	* 3670	* 2830	2640	3200	2050	7.01
(15.0 ft)	lb					* 8090	* 8090	* 6240	5820	7050	4520	(23.0)
3.0m	kg			* 6820	* 6820	* 4620	4090	* 3860	2580	2880	1820	7.41
(10.0 ft)	lb			* 15040	* 15040	* 10190	9020	* 8510	5690	6350	4010	(24.3)
1.5 m	kg			* 7800	7120	* 5680	3850	3930	2480	2820	1770	7.43
(5.0 ft)	lb			* 17200	15700	* 12520	8490	8660	5470	6220	3900	(24.4)
Ground Line	kg			* 8700	6940	6050	3700	3850	2410	3020	1890	7.09
	lb			* 19180	15300	13340	8160	8490	5310	6660	4170	(23.3)
(-1.5 m	kg	* 7330	* 7330	* 9540	6960	6010	3670			3630	2290	6.31
(-5.0 ft)	lb	* 16160	* 16160	* 21030	15340	13250	8090			8000	5050	(20.7)
(-3.0 m	kg			* 7950	7130	* 5200	3760					
(-10.0 ft)	lb			* 17530	15720	* 11460	8290					

Boom : 4.6 m (15' 1") / Arm : 2.5 m (8' 2") / Bucket : 0.58 m³ (0.76 yd³) SAE heaped / Shoe : 800 mm (32") triple grouser with 2,000 kg (4,410 lb) counterweight

Load point height m (ft)		Load radius								At max. reach		
		1.5 m (5.0 ft)		3.0 m (10.0 ft)		4.5 m (15.0 ft)		6.0 m (20.0 ft)		Capacity		Reach
												m (ft)
6.0 m	kg									* 2830	2180	6.87
(20.0 ft)	lb									* 6240	4810	(22.5)
4.5 m	kg					* 3040	* 3040	* 2930	2690	2790	1770	7.63
(15.0 ft)	lb					* 6700	* 6700	* 6460	5930	6150	3900	(25.0)
3.0m	kg			* 5460	* 5460	* 4030	* 4030	* 3470	2590	2540	1590	7.99
(10.0 ft)	lb			* 12040	* 12040	* 8880	* 8880	* 7650	5710	5600	3510	(26.2)
1.5 m	kg			* 8460	7290	* 5200	3880	3930	2480	2490	1540	8.01
(5.0 ft)	lb			* 18650	16070	* 11460	8550	8660	5470	5490	3400	(26.3)
Ground Line	kg	* 3600	* 3600	* 8880	6920	6030	3680	3820	2380	2630	1630	7.70
	lb	* 7940	* 7940	* 19580	15260	13290	8110	8420	5250	5800	3590	(25.3)
(-1.5 m	kg	* 6200	* 6200	* 9840	6850	5940	3600	3780	2340	3050	1900	7.00
(-5.0 ft)	lb	* 13670	* 13670	* 21690	15100	13100	7940	8330	5160	6720	4190	(23.0)
(-3.0 m	kg	* 9390	* 9390	* 8770	6960	* 5760	3640			* 3520	2650	5.74
(-10.0 ft)	lb	* 20700	* 20700	* 19330	15340	* 12700	8020			* 7760	5840	(18.8)

Boom : 4.6 m (15' 1") / Arm : 3.0 m (9' 10") / Bucket : 0.58 m³ (0.76 yd³) SAE heaped / Shoe : 800 mm (32") triple grouser with 2,000 kg (4,410 lb) counterweight

Load point height m (ft)		Load radius										At max. reach		
		1.5 m (5.0 ft)		3.0 m (10.0 ft)		4.5 m (15.0 ft)		6.0 m (20.0 ft)		7.5 m (25.0 ft)		Capacity		Reach
														m (ft)
6.0 m	kg							* 2060	* 2060			* 2550	1900	7.41
(20.0 ft)	lb							* 4540	* 4540			* 5620	4190	(24.3)
4.5 m	kg							* 2660	* 2660			2510	1570	8.11
(15.0 ft)	lb							* 5860	* 5860			5530	3460	(26.6)
3.0m	kg					* 3480	* 3480	* 3120	2610	* 1790	1740	2300	1420	8.45
(10.0 ft)	lb					* 7670	* 7670	* 6880	5750	* 3950	3840	5070	3130	(27.7)
1.5 m	kg			* 7490	7480	* 4750	3920	* 3710	2480	* 2230	1690	2250	1380	8.47
(5.0 ft)	lb			* 16510	16490	* 10470	8640	* 8180	5470	* 4920	3730	4960	3040	(27.8)
Ground Line	kg	* 3650	* 3650	* 9450	6950	* 5770	3680	3810	2360	* 1990	1640	2360	1440	8.18
	lb	* 8050	* 8050	* 20830	15320	* 12720	8110	8400	5200	* 4390	3620	5200	3170	(26.8)
-1.5 m	kg	* 5660	* 5660	* 9900	6800	5900	3560	3740	2300			2680	1650	7.53
(-5.0 ft)	lb	* 12480	* 12480	* 21830	14990	13010	7850	8250	5070			5910	3640	(24.7)
-3.0 m	kg	* 8220	* 8220	* 9250	6840	5900	3560	3760	2320			* 3380	2180	6.40
(-10.0 ft)	lb	* 18120	* 18120	* 20390	15080	13010	7850	8290	5110			* 7450	4810	(21.0)
-4.5 m	kg			* 7160	7060	* 4420	3710							
(-15.0 ft)	lb			* 15790	15560	* 9740	8180							

1. Lifting capacity is based on SAE J1097, ISO 10567.
2. Lifting capacity of the Robex Series does not exceed 75% of the tipping load with the machine on firm, level ground or 87% of full hydraulic capacity.
3. The load point is a hook located on the back of the bucket.
4. (*) indicates the load limited by hydraulic capacity.

Lifting Capacities

R140LC-9 ADJUSTABLE BOOM

Rating over-front Rating over-side or 360 degrees

Boom : 4.9 m (16' 1") / Arm : 1.9 m (6' 3") / Bucket : 0.58 m³ (0.76 yd³) SAE heaped / Shoe : 600 mm (24") triple grouser with 2,000 kg (4,410 lb) counterweight

Load point height m (ft)		Load radius						At max. reach		
		3.0 m (10.0 ft)		4.5 m (15.0 ft)		6.0 m (20.0 ft)		Capacity		Reach
										m (ft)
6.0 m	kg			* 2900	* 2900			* 2880	2010	6.45
(20.0 ft)	lb			* 6390	* 6390			* 6350	4430	(21.2)
4.5 m	kg			* 3280	* 3280	* 3150	2220	2530	1540	7.33
(15.0 ft)	lb			* 7230	* 7230	* 6940	4890	5580	3400	(24.0)
3.0m	kg	* 6420	* 6420	* 4230	3440	3470	2130	2240	1340	7.76
(10.0 ft)	lb	* 14150	* 14150	* 9330	7580	7650	4700	4940	2950	(25.5)
1.5 m	kg			5310	3160	3340	2020	2170	1280	7.84
(5.0 ft)	lb			11710	6970	7360	4450	4780	2820	(25.7)
Ground Line	kg	* 5430	* 5430	5110	2980	3240	1930	2270	1340	7.58
	lb	* 11970	* 11970	11270	6570	7140	4250	5000	2950	(24.9)
(-1.5 m	kg	* 9210	5620	5050	2940	3220	1900	2630	1570	6.93
(-5.0 ft)	lb	* 20300	12390	11130	6480	7100	4190	5800	3460	(22.7)
(-3.0 m	kg	* 8450	5780	5130	3000					
(-10.0 ft)	lb	* 18630	12740	11310	6610					

Boom : 4.9 m (16' 1") / Arm : 2.1 m (6' 11") / Bucket : 0.58 m³ (0.76 yd³) SAE heaped / Shoe : 600 mm (24") triple grouser with 2,000 kg (4,410 lb) counterweight

Load point height m (ft)		Load radius						At max. reach		
		3.0 m (10.0 ft)		4.5 m (15.0 ft)		6.0 m (20.0 ft)		Capacity		Reach
										m (ft)
6.0 m	kg			* 2690	* 2690			* 2760	1900	6.68
(20.0 ft)	lb			* 5930	* 5930			* 6080	4190	(21.9)
4.5 m	kg			* 3080	* 3080	* 2990	2230	2420	1470	7.52
(15.0 ft)	lb			* 6790	* 6790	* 6590	4920	5340	3240	(24.7)
3.0m	kg	* 5930	* 5930	* 4030	3460	* 3360	2140	2150	1280	7.94
(10.0 ft)	lb	* 13070	* 13070	* 8880	7630	* 7410	4720	4740	2820	(26.0)
1.5 m	kg			* 5140	3160	3340	2010	2080	1220	8.02
(5.0 ft)	lb			* 11330	6970	7360	4430	4590	2690	(26.3)
Ground Line	kg	* 5690	5540	5090	2960	3230	1910	2170	1270	7.77
	lb	* 12540	12210	11220	6530	7120	4210	4780	2800	(25.5)
(-1.5 m	kg	* 8930	5560	5020	2900	3190	1870	2490	1470	7.14
(-5.0 ft)	lb	* 19690	12260	11070	6390	7030	4120	5490	3240	(23.4)
(-3.0 m	kg	* 8650	5690	5070	2950					
(-10.0 ft)	lb	* 19070	12540	11180	6500					

Boom : 4.9 m (16' 1") / Arm : 2.5 m (8' 2") / Bucket : 0.58 m³ (0.76 yd³) SAE heaped / Shoe : 600 mm (24") triple grouser with 2,000 kg (4,410 lb) counterweight

Load point height m (ft)		Load radius										At max. reach		
		1.5 m (5.0 ft)		3.0 m (10.0 ft)		4.5 m (15.0 ft)		6.0 m (20.0 ft)		7.5 m (25.0 ft)		Capacity		Reach
														m (ft)
6.0 m	kg							* 2250	* 2250			* 2570	1660	7.18
(20.0 ft)	lb							* 4960	* 4960			* 5670	3660	(23.6)
4.5 m	kg					* 2700	* 2700	* 2710	2270			2190	1310	7.96
(15.0 ft)	lb					* 5950	* 5950	* 5970	5000			4830	2890	(26.1)
3.0m	kg			* 5070	* 5070	* 3660	3520	* 3120	2160	* 1900	1400	1970	1150	8.35
(10.0 ft)	lb			* 11180	* 11180	* 8070	7760	* 6880	4760	* 4190	3090	4340	2540	(27.4)
1.5 m	kg			* 7220	5960	* 4830	3200	3350	2020	2300	1350	1900	1100	8.43
(5.0 ft)	lb			* 15920	13140	* 10650	7050	7390	4450	5070	2980	4190	2430	(27.7)
Ground Line	kg			* 6040	5560	5100	2970	3220	1900	2250	1310	1980	1140	8.19
	lb			* 13320	12260	11240	6550	7100	4190	4960	2890	4370	2510	(26.9)
-1.5 m	kg	* 4680	* 4680	* 8220	5510	4990	2880	3160	1850			2230	1300	7.60
(-5.0 ft)	lb	* 10320	* 10320	* 18120	12150	11000	6350	6970	4080			4920	2870	(24.9)
-3.0 m	kg			* 9010	5600	5010	2900	3190	1870					
(-10.0 ft)	lb			* 19860	12350	11050	6390	7030	4120					

1. Lifting capacity is based on SAE J1097, ISO 10567.
2. Lifting capacity of the Robex Series does not exceed 75% of the tipping load with the machine on firm, level ground or 87% of full hydraulic capacity.
3. The load point is a hook located on the back of the bucket.
4. (*) indicates the load limited by hydraulic capacity.

Notes

Notes

STANDARD EQUIPMENT

ISO Standard cabin
- All-weather steel cab with 360° visibility
- Safety glass windows
- Rise-up type windshield wiper
- Sliding fold-in front window
- Sliding side window
- One key fits all lockable doors
- Hot & cool box
- Storage compartment & Ashtray
- Transparent cabin roof-cover
- Radio / MP3 Player with AUX-input
- Handsfree mobile phone system with USB-charging device
- Sun visor

Computer aided power optimization (New CAPO) system
- 3-power modes, 3-work modes, User mode
- Auto & one-touch deceleration system
- Auto warm-up system
- Overheat prevention system

Self-diagnostics system

Starting Aid (air grid heater) for cold weather

Centralized monitoring
- LCD display
- Engine speed or Trip meter
- Clock
- Gauges
- Fuel level gauge
- Engine coolant temperature gauge
- Hyd. oil temperature gauge
- Warning lamps
- Engine warning
- Overload
- Communication error
- Low battery
- Air filter clogging
- Indicators
- Max power
- Low speed/High speed
- Fuel warmer
- Auto deceleration

Door and cab locks, one key

Two outside rearview mirrors

Fully adjustable suspension seat with seat belt

Adjustable joysticks

Console box tilting system (LH.)

Three frontal working lights

Electric horn

Batteries (2 x 12V x 80 AH)

Battery master switch

Removable clean-out screen for oil cooler

Automatic swing brake

Removable reservoir tank

Fuel pre-filter with fuel warmer

Boom holding system

Arm holding system

Counterweight (2,000 kg; 4,410 lb)

Track shoes (600 mm; 24”)

Track rail guard

Viscous fan clutch

Accumulator for lowering work equipment

Electric transducer

Lower frame under cover

OPTIONAL EQUIPMENT

Fuel filler pump (50 L/min)

Beacon lamp

Safety lock valve for boom cylinder with overload warning device

Safety lock valve for arm cylinder

Single-acting piping kit (breaker, etc.)

Double-acting piping kit (clamshell, etc.)

Quick coupler

12 volt power outlet (24V DC to 12V DC converter)

Travel alarm

Boom
- Short boom (4.1 m; 13’ 5”)
- Hyd. adjustable boom (4.9 m; 16’ 1”)

Arm
- Extra Short arm (1.9 m; 6’ 3”)
- Short arm (2.1 m; 6’ 11”)
- Long arm (3.0 m; 9’ 10”)

Automatic climate control
- Full-automatic air conditioner & heater
- Semi-automatic air conditioner & heater
- Air conditioner
- Heater
- Defroster

Cabin FOPS/FOG (ISO/DIS 10262)
- FOPS (Falling Object Protective Structure)
- FOG (Falling Object Guard)

Cabin roof-steel cover

Cabin lights

Rain guard - front window

Track shoes
- Triple grousers shoe (500 mm; 20”)
- Triple grousers shoe (700 mm; 28”)
- Triple grousers shoe (800 mm; 32”), R140LCM-9
- Double grousers shoe (710 mm; 28”), R140LCM-9

R140LCD-9 Blade: 550 mm (1’ 8”) x 2,500 mm (8’ 2”)
550 mm (1’ 8”) x 2,600 mm (8’ 6”)

Additional cover under lower frame

Coolant pre-heating system

Tool kit

Operator suit

Rearview camera

Seat
- Adjustable air suspension seat
- Adjustable air suspension seat with heater
- Mechanical suspension seat with heater

Pattern change valve (4 patterns)

Hi-mate (Remote Management System)

Standard and optional equipment may vary. Contact your Hyundai dealer for more information. The machine may vary according to International standards.
All imperial measurements rounded off to the nearest pound or inch.

PLEASE CONTACT

HYUNDAI
HEAVY INDUSTRIES EUROPE
CONSTRUCTION EQUIPMENT

Hyundai Heavy Industries Europe N.V.
VOSSENDAAL 11, 2440 GEEL, BELGIUM **TEL**: (32) 14-56-2200 FAX: (32) 14-59-3405